ANGUS

Item #	Construction Details ANGUS SOUTH: LOT 151-8 Model Type & Elevation : 23-04 JASMINE ELEVATION A OPT 4 BEDROOM Purchasers Names : HEATHER MARSHAL	Date	Note
Included	*Rough-in for 3 Piece in basement*		Bonus Package
Included	*3 piece stainless steel kitchen appliances with white top loading washer and dryer*		Bonus Package
Included	*Chimney Hood Fan*		Bonus Package
Included	*Natural finish laminate flooring on main floor in non tiles areas as per plan- SEE ITEM#5- UPGRADE TO STAINED*		Bonus Package
Included	*9' main floor ceilings, 8 ft ceilings on second and basement*		Bonus Package
Included	*Carpet Grade Stairs with Oak pickets*		Bonus Package
Included	*Glass shower (framed) in Master Ensuite as per plan*		Bonus Package
1/	GARAGE MAN DOOR INTO THE HOUSE	16-Jan-17	COLOURS

ZANCOR HOMES COLOUR CHART

CABINETRY / COUNTERTOPS				
	DOOR STYLE	HARDWARE	COUNTERTOP	EDGE
Kitchen	STD CAMBRIDGE OAK OLD WALNUT	H800BC	BORDEAUX JUPARANA #4929-38	STD
Island	STD CAMBRIDGE OAK OLD WALNUT	H800BC	BORDEAUX JUPARANA #4929-38	STD
Master Ensuite	STD CONT SLAB OAK MAYFLOWER STAIN	H800BC	AUTUMN CARNIVAL #1877K-52	STD
Main	STD CONT SLAB OAK MAYFLOWER STAIN	H500BC	AUTUMN CARNIVAL #1877K-52	STD
Basement Bath				

TILES		INSERTS	THRESHOLDS
Main Foyer	GRECO BEIGE 13 X 13		
Powder Room	GRECO BEIGE 13 X13		
Kitchen Floor	GRECO BEIGE 13 X 13		
Breakfast Floor	GRECO BEIGE 13 X 13		
Mstr Ensuite Floor	GRECO IVORY 13 X 13	PERLATO ROYALE	
Mstr Ensuite Shower	MELENA IVORY 8 X10		
Master Shower Floor	BONE 2 X2		
Master Shower Jamb	PERLATO ROYALE		
Main Bath Floor	GRECO IVORY 13 X13	PERLATO ROYALE	
Main Bath Tub Wall	BELLINA GREY 8 X10		
Basement Ensuite Wall			

HARDWOOD / CARPET	
Dinning Room	LAMINATE LEXINGTON BUTTER RUM OAKTL-21007
GREAT ROOM	LAMINATE LEXINGTON BUTTER RUM OAK TL-21007
Kitchen *(Waiver)	N/A
Main Foyer *(Waiver)	N/A
Main Hall	LAMINATE LEXINGTON BUTTER RUM OAK TL-210071
Upper Hall	CARPET- VANESSA #6867
Master Bedroom	CARPET- VANESSA #6867
Bedroom 2	CARPET- VANESSA #6867
Bedroom 3	CARPET- VANESSA #6867
Bedroom 4	CARPET- VANESSA #6867
Carpet Underpad	STANDARD

FIREPLACES					
LOCATION	N/A	Opt. Surround	N/A	MANTLE	N/A
LOCATION		Opt. Surround		MANTLE	

MIRRORS & ACCESSORIES		PLASTER MOULDING	
Mirrors	YES	Opt. Crown Moulding	N/A
Bathroom Accessories	YES	Location	

Purchaser has reviewed the colour chart	**SITE & LOT**	
******FOR TRADE USE******	PINE RIVER SOUTH	LOT 151-8
***Any upgrades in the colour chart must be accompanied with a PES. It is the responsibility of* all Trades to inform the builder of any discrepancies on sketches, PES and/or colour charts PRIOR to installation.**	AM	
**** PAGE 1 OF 2 ****	**Purchaser Initial**	**Vendor**

JAN 16 2016

ZANCOR HOMES COLOUR CHART

STAIRS, RAILING & PICKETS & STAIR STAIN		
Stair Stain / Species:	STANDARD	CARPET GRADE STAIRS VARNISH ONLY
Main to 2nd Railing Details:	STANDARD	
Main to Basement Railing Details:	STANDARD	

TRIM	
Casing/Baseboards	STANDARD
Interior Doors	STANDARD
Interior Door Hardware	STANDARD
Exterior Door Hardware	STANDARD

PAINT			
Kitchen/Breakfast	BIRCH WHITE	Master Beds	BIRCH WHITE
Living Room	NA	Bedroom 2	BIRCH WHITE
Dining Room	NA	Bedroom 3	BIRCH WHITE
Family/Great room	BIRCH WHITE	Bedroom 4	BIRCH WHITE
Den/Study	NA	Master Ens.	BIRCH WHITE
Main/Upper Hall	BIRCH WHITE	Main	BIRCH WHITE
Laundry	NA	Twin	NA
Powder Room	BIRCH WHITE	Basement	NA

PLUMBING- UPGRADES TO BE DETAILED ON PES			
	FIXTURES	FAUCETS	NOTES
Kitchen	STANDARD	STANDARD	
Powder Room	↓	↓	
Master Ensuite			
Main/Twin			
2nd Ensuite			
BASEMENT			
Other			

ZANCOR APPLIANCE REQUIREMENTS-UPGRADES TO BE DETAILED ON PES			
Appliance Package received in 'Schedule E'	**YES / NO Package Name:**		
	UPG (SEE PES)	**DECLINED**	**NOTES**
GAS LINE	NO	✓	
WATERLINE to Fridge	NO	✓	
Hood Fan Venting **SIZE**	NO	✓	
ELECTRICAL for Built-in Oven	NO	✓	
ELECTRICAL for Built-in Micro / OTR	NO	✓	
ELECTRICAL for Gas Stove / Cooktop	NO	✓	
ELECTRICAL for Bar Fridge	NO	✓	

DISCLAIMER	INITIALS
Colours of all materials are as close as possible to Builders selection but not necessarily identical due to dye lot variances in manufacturing/manufacturers. Due to construction progress some items may have been pre-selected or installed. In this event the Vendors's selection must be accepted by the purchaser	HM
Any changes to the colour chart after signing are subject to a **$5000** administration fee plus costs	HM
Purchaser has checked and acknowledged accuracy of colour and selections before signing.	HM

SITE:	**PINE RIVER SOUTH** **LOT: 151-8**	
PURCHASER(S):	**HEATHER MARSHAL**	H Marshall 1/09/17
HOME #/CELL #	**905-715-1483**	Purchaser Signature / Date
EMAIL:	heathermars21@gmail.com	
DÉCOR NOTES		Purchaser Signature / Date
		LILY JAN 9/17
		Décor Consultant Signature / Date
		JAN 16 2016
		Vendor Signature / Date

FOR TRADE USE

Any upgrades in the colour chart must be accompanied with a PES.

It is the responsibility of all Trades to inform the builder of any discrepancies on sketches, PES and/or colour charts PRIOR to installation.

ZANCOR HOMES

***** PAGE 2 OF 2 *****

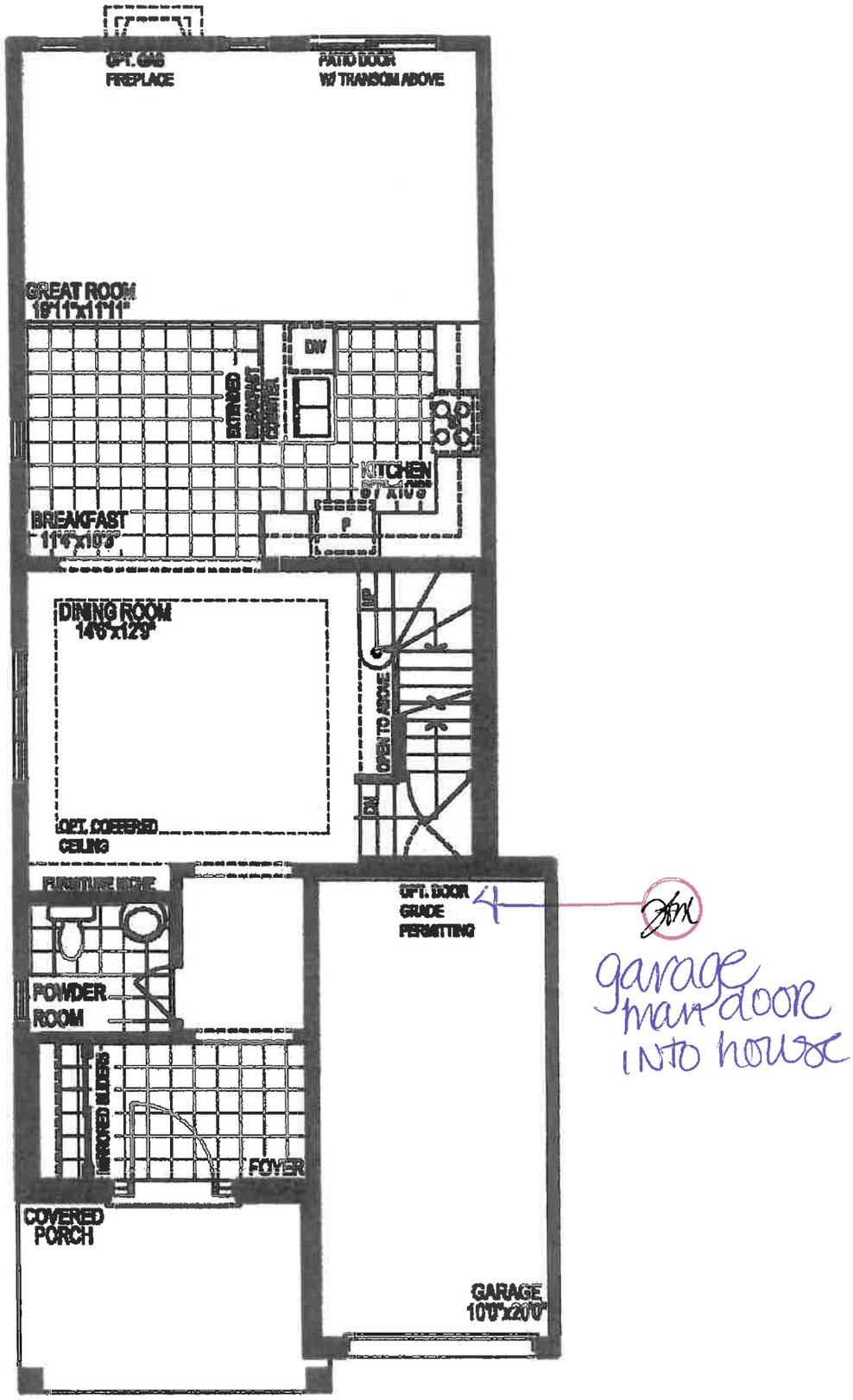

GROUND FLOOR PLAN, EL. 'B'
(END CONDITION ONLY)

JASMINE 2304

Jan 9/17

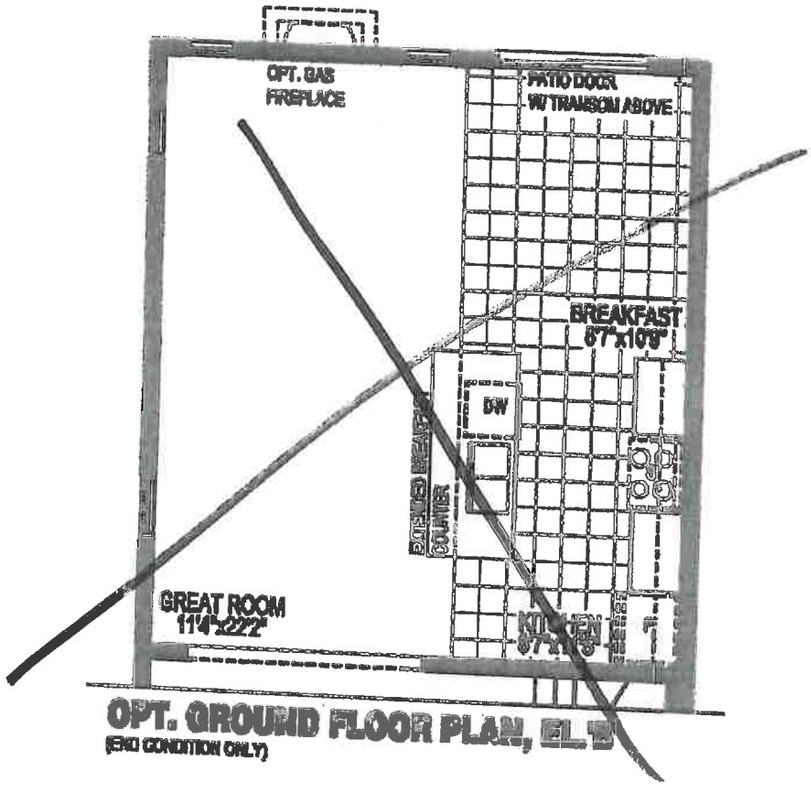

OPT. GROUND FLOOR PLAN, EL.'B'
(END CONDITION ONLY)

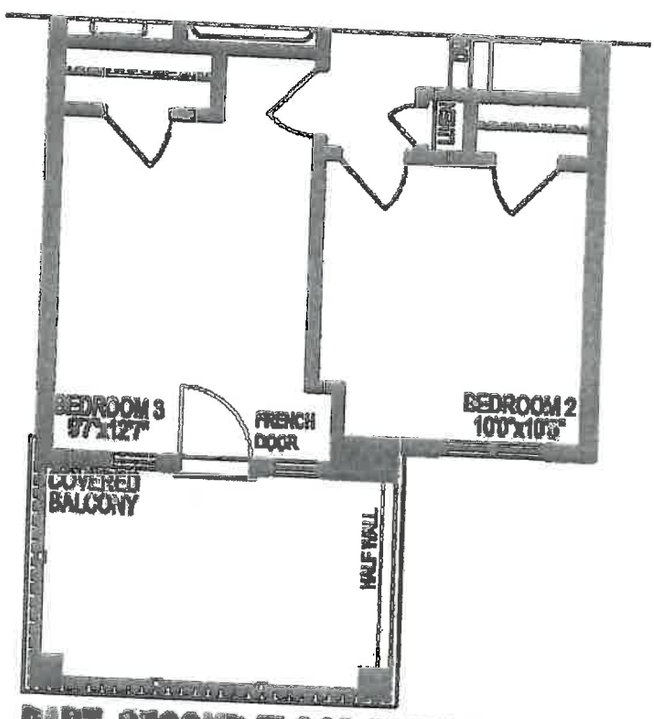

PART. SECOND FLOOR PLAN, EL.'B'
(END CONDITION ONLY)

JASMINE 2304

Prices and specifica
sizes and location m
required at front ent
floor space may var
dimensions may ch

LOT 151-8
PINE RIVER SOUTH

Jan 9/17

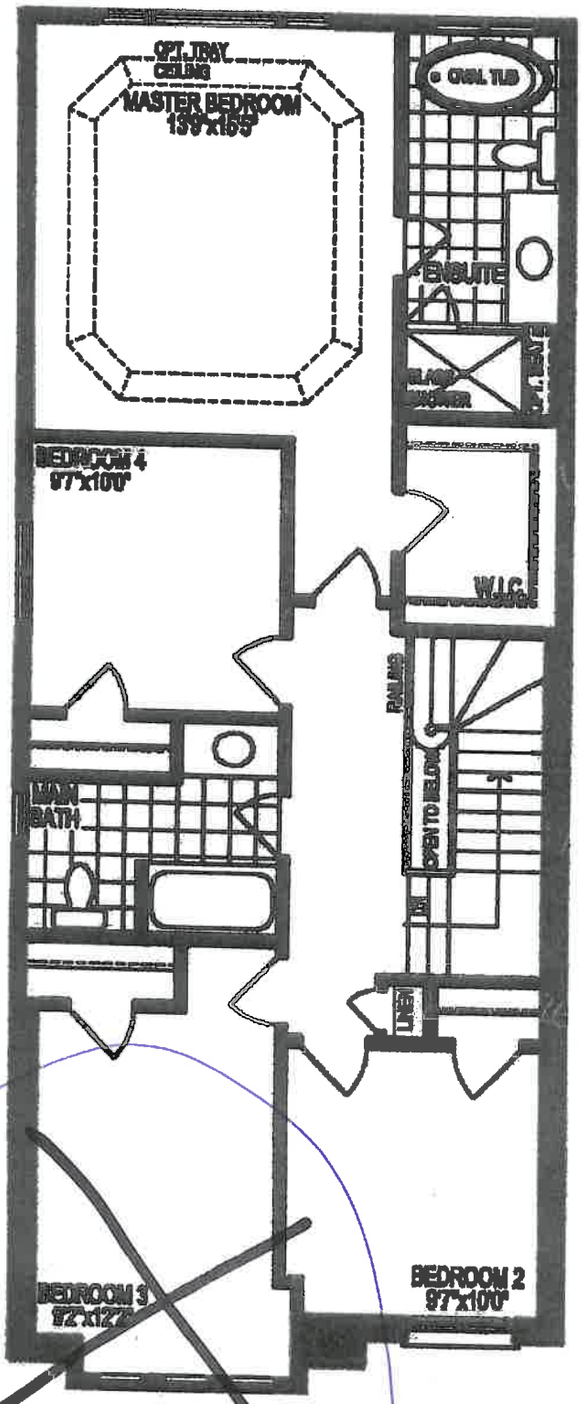

OPT. SECOND FLOOR PLAN W/ 4 BDRM, EL.'A' (EL.'B' SIMILAR)
(END CONDITION ONLY)

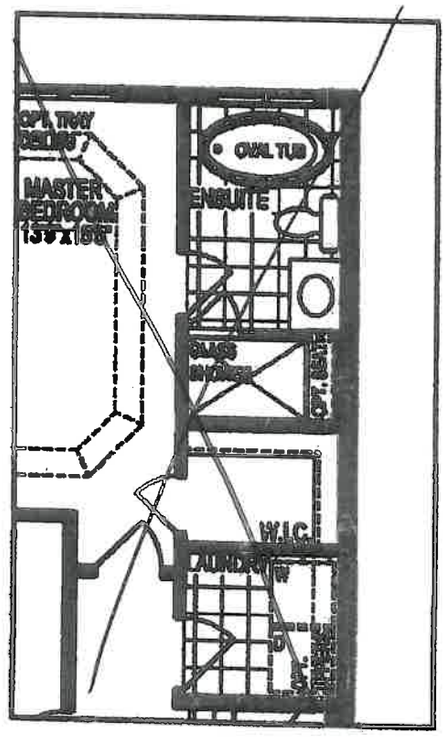

OPT. 4 BED SECOND FLOOR PLAN W/ OPT. LAUNDRY
(END CONDITION ONLY)

JASMINE 2304

LOT 151-8
PINE RIVER SOUTH

Jeen 9/17

SCHEDULE "B"

FLOOR PLAN

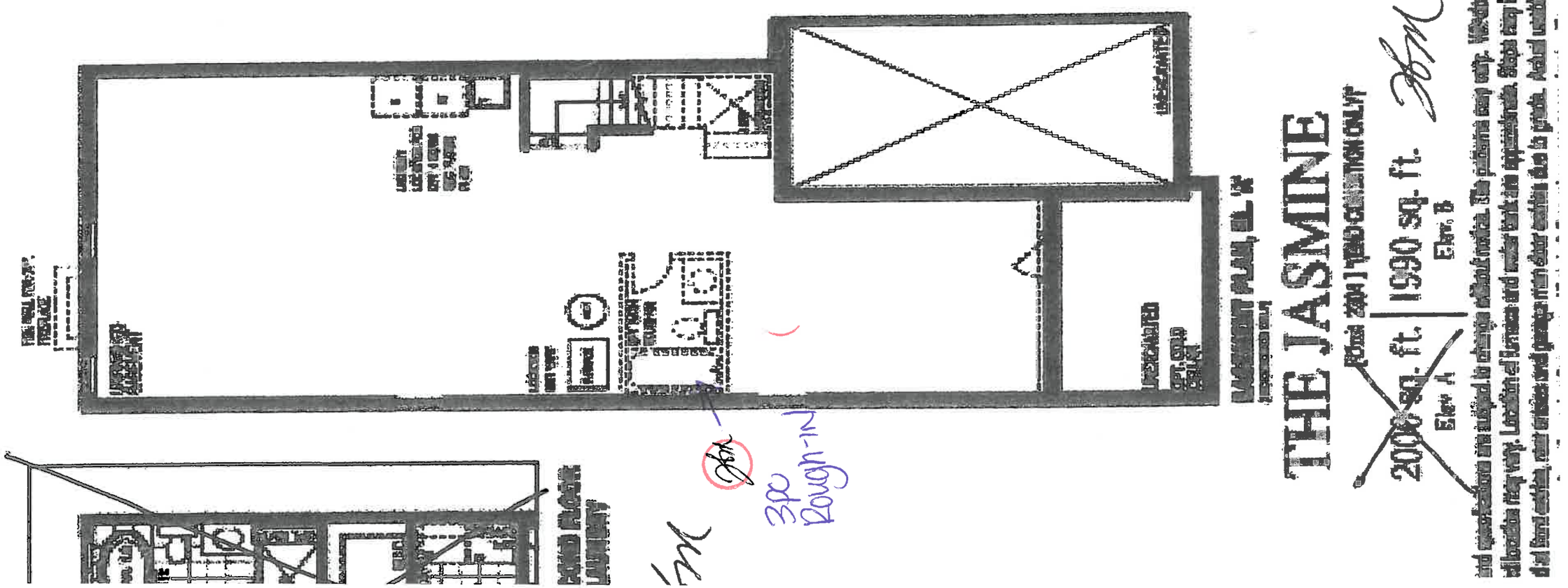

Jan 9/17

2304

LOT 151-8
PINE RIVER SOUTH

LOT 151-8 PINE RIVER SOUTH.

STANDARD CABINET HARDWARE

(New Image Kitchens)

MAIN BATHROOM

KITCHEN & MASTER BATHROOM

Jan 9/17

PINE RIVER SOUTH

APPLIANCE SPEC INFORMATION SHEET

STE & LOT: LOT 151-8 **DATE:** JAN 9 2017

SITING: [x] Standard [ ] Reverse

RANGE

- [x] 30" (STD)
- [ ] 36"
- [ ] 48"
- [ ] GAS [ ] AMPS _____
- [ ] COOKTOP (APRON) [ ] AMPS _____
- [ ] COOKTOP (DROPIN) [ ] AMPS _____

REFRIGERATOR

- [x] STANDARD OPENING 36" X 72"
- [ ] BUILT IN FRIDGE
- [ ] WATERLINE REQUIRED
- [ ] PANELLED/INTEGRATED
- [ ] FLUSH INSET

WALL OVENS

- [ ] 30"
- [ ] SINGLE [ ] AMPS _____
- [ ] DOUBLE [ ] AMPS _____
- [ ] STEAM OVEN [ ] AMPS _____
- [ ] WARMING DRAWER [ ] AMPS _____

MICROWAVES

- [ ] BUILT IN MICRO [ ] AMPS _____
- [ ] MICRO TRIM KIT [ ] MODEL _____
- [ ] OVER THE RANGE [ ] AMPS _____

HOOD FANS

- [ ] CHIMNEY (CENTRE VENT)
- [ ] UNDER CABINET
- [ ] FLUSH INSET
- [x] 6 INCH (STD)
- [ ] 8 INCH
- [ ] 10 INCH

DISHWASHER

- [x] 24" (STD SIZE)

LAUNDRY

- [x] FRONT LOADING SIDE BY SIDE
- [ ] STACKABLE

HM Additional charges may apply for cabinetry, electrical and plumbing in order to accommodate the specs given by the homeowner.

HM **NOTE:** It is the Purchaser's responsibility to coordinate delivery, installation and hook up of appliances and to ensure they are installed as per Manufacturers specifications after closing.

HM Purchaser acknowledges responsibility for providing correct specification for such appliances. The purchaser agrees to deliver forthwith to the Builder the manufacturer's appliance specifications where the size exceeds the standard openings.

HM **If specs not received, the standard openings as determined by Zancor Homes will be provided. If rework/repair is required due to late specs received, additional costs will be applied.**

Appliance Specs are DUE:
2 WEEKS FROM SIGNED DATE BELOW – Specs received after this date, if accepted, an administration fee of minimum $250 will apply

Appliance Specs RECEIVED STD. INCL.

Purchaser Signature H Marshall. Date JAN 9 2017

Purchaser Signature _____ Date _____

ZANCOR
HOMES

INTERIOR FINISHES ACKNOWLEDGEMENT / HARDWOOD WAIVER

Purchaser accepts and acknowledges that the Builder reserves the right to substitute materials with those of equal or better quality where the manufacture, scheduling or delivery of materials may directly impact the Builder's ability to meet its' contractual obligations under the Agreement of Purchase and Sale.

PORCELAIN & NATURAL STONES: Due to the properties of natural stones including but not limited to **marble, granite, quartz,** no two pieces are exactly the same. Variations in colour, tone, granularity (pitting, fissures) and pattern are to be expected, including various lighting may affect the overall finished look. Stone should never be cleaned with lemon oil or vinegar. The purchaser acknowledges colour and product variations as well as natural imperfections that may exist with the selection of natural stone materials and shall not hold the Vendor liable for provision of same.

STONE COUNTERTOP JOINTS: Purchaser is aware that one joint will be at each corner and on either side of slide-in-range (if applicable). It will also be where the length of the counter top exceeds the length of a stone slab. Slabs are usually approximately 5'x 8'.

CERAMIC TILES: Due to manufacturing, shade (dye lots), product variations may exist that can affect the overall look of the finished product. Although every effort will be made to ensure the colours and materials selected are as close as possible to the samples, the purchaser acknowledges that the sample tiles supplied in the Design Centre may not be identical to the materials installed in the home.

STAIR STAINS: Due to the natural properties of wood, many variables can affect the overall look of the finished product. Factors including but not limited to wood type, knotting, graining, density, age, humidity, and air temperature can result in substantial variations in stain intensity. The purchaser accepts that although the Vendor will do their best to match stain the unfinished stairs as close as possible to the pre-finished floors, it is not possible to have an identical match and that there MAY be shade differences between the two products.

CABINETRY: Due to the natural properties of wood, slight variations apparent with cabinetry are to be expected. This includes but not limited to wood species, wood grain, colour, finish, product variations, and natural imperfections are all factors that may affect the overall look of the finished product. Such factors make exact colour matching impossible. The type and intensity of lighting in the areas of designated cabinetry placement may also highlight characteristics of cabinetry finish. All cabinets shall be finished with a white melamine interior box unless a finished interior is upgraded. Due to building specifications and/or on-site conditions, certain cabinetry upgrades may not be possible. The purchaser acknowledges that the Builder cannot guarantee the cabinetry finish or provision of certain upgrades and shall not hold the Builder liable for provision of same.

UPGRADES/EXTRAS: All upgrades and additional selections indicated on the colour chart must be accompanied by an upgrades/extras sheet (PES) and full payment otherwise the selection will be invalid. All colour charts and upgrades/extras will not proceed until verified and signed by an authorized signing officer at the Vendor's head office. **CHANGES WILL NOT BE PERMITTED UPON COMPLETION AND SUBMISSION OF THE COLOUR CHART.**

HARDWOOD FLOORING: Due to the natural properties of wood, many variables can affect the overall look of the finished product. Variations include but not limited to wood type, colour/stain and wood grain are significant factors that make exact colour matching impossible. The purchaser acknowledges that the hardwood flooring is a pre-finished product in a controlled environment. Expansion, compression and cupping are characteristics of hardwood flooring once installed in the home. The purchaser acknowledges these may become apparent over time and despite the Builders' efforts to install the hardwood flooring materials in keeping with good workmanship, the Builder shall not be responsible nor held liable for minor variances of fluctuation in hardwood flooring materials.

HARDWOOD WAIVER:

I/We understand hardwood flooring is classified as a porous material and as such not recommended by the Builder in certain areas. I/We understand there is a concern due to possible water and other substances being frequently splashed or spilled onto the floor and in contravention of Ontario Building Code Section 9.30.1.2(1).

"Finished flooring bathrooms, kitchens, public entrance halls, laundry & general storage areas shall consist of resilient flooring, felted-synthetic-fibre floor coverings, concrete, terrazzo, ceramic tile, mastic or other types of flooring providing similar degrees of water resistance.

I/We are prepared to assume full responsibility for any damage caused to the hardwood floor or subfloor due to moisture absorbency in the mentioned areas, and agree to waive any claims against the Township of residence, TARION and/or the Builder in relation to the matter. ****SEE COLOUR CHART FOR LOCATIONS****

SITE	LOT	DATE
Pine River South	LOT 151-8	JAN 9 2017

Whirlpool

Top Mount Refrigerator

LOT 151-8

ANGUS SOUTH

PRODUCT MODEL NUMBERS

WRT108FZD
WRT138FZD
WRT148FZD
WRT318FZD
WRT318FMD
WRT519SZD
WRT549SZD

Electrical: A 115-volt, 60-Hz, AC-only, 15- or 20-amp fused, grounded electrical supply is required. It is recommended that a separate circuit serving only your refrigerator be provided. Use an outlet that cannot be turned off by a switch. Do not use an extension cord.

NOTE: Before performing any type of installation, cleaning, or removing a light bulb, turn the control (Thermostat, Refrigerator or Freezer Control depending on the model) to OFF and then disconnect the refrigerator from the electrical source. When you are finished, reconnect the refrigerator to the electrical source and reset the control (Thermostat, Refrigerator or Freezer Control depending on the model) to the desired setting. See "Using the Controls."

Water: A cold water supply with water pressure between 30 and 120 psi (207 and 827 kPa) is required to operate ice maker and water dispenser. If you have questions about your water pressure, call a licensed, qualified plumber.

IMPORTANT: The pressure of the water coming out of a reverse osmosis system going to the water inlet valve of the refrigerator needs to be between 30 and 120 psi (207 and 827 kPa).

Reverse Osmosis Water Supply: If a reverse osmosis water filtration system is connected to your cold water supply, the water pressure to the reverse osmosis system needs to be a minimum of 40 to 60 psi (276 to 414 kPa).

PRODUCT DIMENSIONS

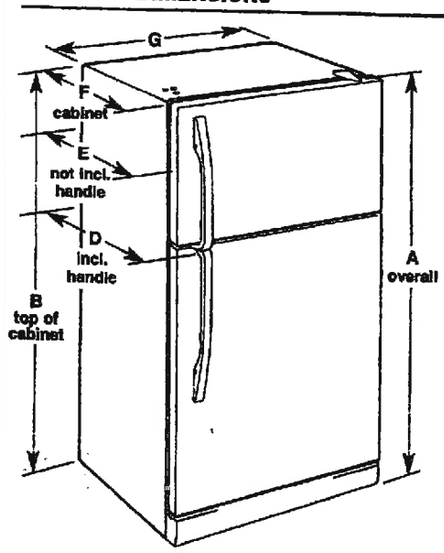

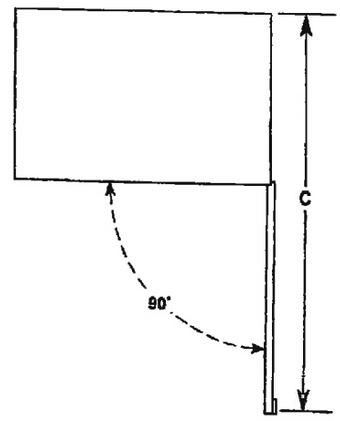

Model Number	Model Size	Reversible Door	Height - Overall "A"	Height - Top of Cabinet "B"	Depth - Door Open 90° "C"	Depth - With Handles "D"	Depth - Without Handles "E"	Depth - Cabinet Only "F"	Width - Cabinet "G"
WRT108FZD WRT138FZD WRT148FZD WRT318FZD WRT318FMD	18.2 cu. ft.	Yes	65⅞" (167.3 cm)	65⅝" (166 cm)	59¾" (151.8 cm)	33½" (85 cm)	31⅜" (79.7 cm)	28⅞" (73.3 cm)	29¾" (75.6 cm)
WRT519SZD WRT549SZD	19.2 cu. ft.	Yes	65⅞" (167.3 cm)	65⅝" (166 cm)	59⅞" (152 cm)	34½" (87.6 cm)	32⅞" (83.5 cm)	28⅞" (73.3 cm)	29¾" (75.6 cm)

LOCATION REQUIREMENTS

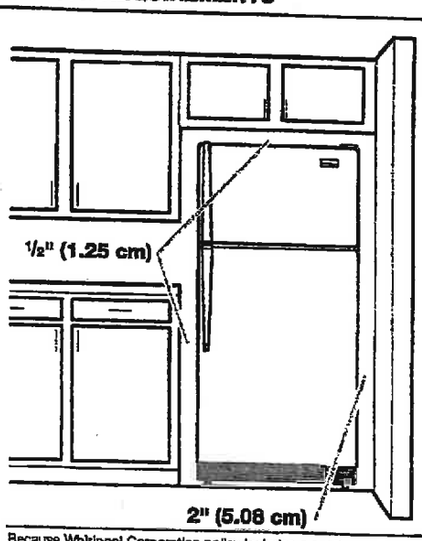

To ensure proper ventilation for your refrigerator, allow for a ½" (1.25 cm) space on each and between overhead cabinets and refrigerator top. Allow at least 1" (2.5 cm) between back of cabinet and the wall. If your refrigerator has an ice maker, make sure you leave some extra space at the back for the water line connections.

If you are installing your refrigerator next to a fixed wall, leave 2" (5 cm) minimum on the hinge side (depending on your model) to allow for the door to swing open.

NOTE: This refrigerator is intended for use in a location where the temperature ranges from a minimum of 55°F (13°C) to a maximum of 110°F (43°C). The preferred room temperature range for optimum performance, which reduces electricity usage and provides superior cooling, is between 60°F (15°C) and 90°F (32°C). It is recommended that you do not install the refrigerator near a heat source, such as an oven or radiator.

Because Whirlpool Corporation policy includes a continuous commitment to improve our products, we reserve the right to change materials and specifications without notice.

Dimensions are for planning purposes only. For complete details, see Installation Instructions packed with product. Specifications subject to change without notice.

Ref. W10669181A
4/15

LOT 151-8
ANGUS SOUTH

INSTALLATION REQUIREMENTS

Tools and Parts

Gather the required tools and parts before starting installation. Read and follow the instructions provided with any tools listed here.

Tools needed

- Tape measure
- Flat-blade screwdriver
- Phillips screwdriver
- Level
- Hammer
- Hand or electric drill
- Wrench or pliers
- Marker or pencil
- Masking tape
- ¼" drive ratchet
- ¼" nut driver
- ⅜" and 5/16" nut driver
- ⅛" (3.2 mm) drill bit (for wood floors)

Parts supplied

Check that all parts are included.

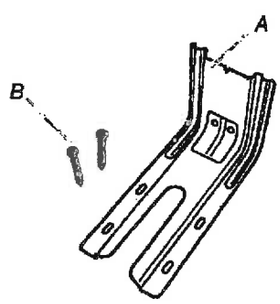

A. Anti-tip bracket
B. #12 x 1⅝" screws (2)

- Anti-tip bracket must be securely mounted to floor or wall. Thickness of flooring may require longer screws to anchor bracket to floor.

Parts needed

Check local codes. Check existing electrical supply. See "Electrical Requirements" section.

It is recommended that all electrical connections be made by a licensed, qualified electrical installer.

Location Requirements

IMPORTANT: Observe all governing codes and ordinances.

- It is the installer's responsibility to comply with installation clearances specified on the model/serial rating plate. The model/serial rating plate is located on the frame behind a top corner of the door or either side of the drawer.
- To eliminate the risk of burns or fire by reaching over heated surface units, cabinet storage space located above the surface units should be avoided. If cabinet storage is to be provided, the risk can be reduced by installing a range hood that projects horizontally a minimum of 5" (12.7 cm) beyond the bottom of the cabinets.
- Cabinet opening dimensions that are shown must be used. Given dimensions are minimum clearances.
- The anti-tip bracket must be installed. To install the anti-tip bracket shipped with the range, see "Install Anti-Tip Bracket" section.
- Grounded electrical supply is required. See "Electrical Requirements" section.

IMPORTANT: To avoid damage to your cabinets, check with your builder or cabinet supplier to make sure that the materials used will not discolor, delaminate or sustain other damage. This oven has been designed in accordance with the requirements of UL and CSA International and complies with the maximum allowable wood cabinet temperatures of 194°F (90°C).

Mobile Home - Additional Installation Requirements

The installation of this range must conform to the Manufactured Home Construction and Safety Standard, Title 24 CFR, Part 3280 (formerly the Federal Standard for Mobile Home Construction and Safety, Title 24, HUD Part 280). When such standard is not applicable, use the Standard for Manufactured Home Installations, ANSI A225.1/NFPA 501A or with local codes.

In Canada, the installation of this range must conform with the current standards CAN/CSA-Z240-latest edition, or with local codes.

Mobile home installations require:

- When this range is installed in a mobile home, it must be secured according to the instructions in this document.

Product Dimensions

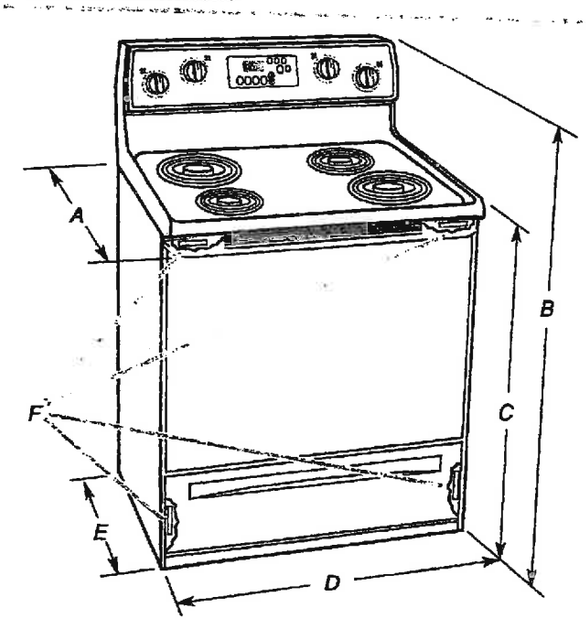

A. 27¾" (70.5 cm) max. depth with handle
*B. 46⅞" (119.1 cm) overall height (max.) with leveling legs screwed all the way in**
*C. 36" (91.4 cm) cooktop height (max.) with leveling legs screwed all the way in**
D. 29⅞" (75.9 cm) width
*E. 25 5/16" (64.3 cm) depth - back of range to front of cooktop***
F. Model/serial rating plate (located on the frame behind a top corner of the door or either side of the drawer)

IMPORTANT: Range must be level after installation. Follow the instructions in the "Level Range" section. Using the cooktop as a reference for leveling the range is not recommended.

*Range can be raised approximately 1" (2.5 cm) by adjusting the leveling legs.

**Front of door and drawer may extend further forward depending on styling.

LOT 151-8 ANGUS SOUTH

Cabinet Dimensions

Cabinet opening dimensions shown are for 25" (64.0 cm) countertop depth, 24" (61.0 cm) base cabinet depth and 36" (91.4 cm) countertop height.

IMPORTANT: If installing a range hood or microwave hood combination above the range, follow the range hood or microwave hood combination installation instructions for dimensional clearances above the cooktop surface.

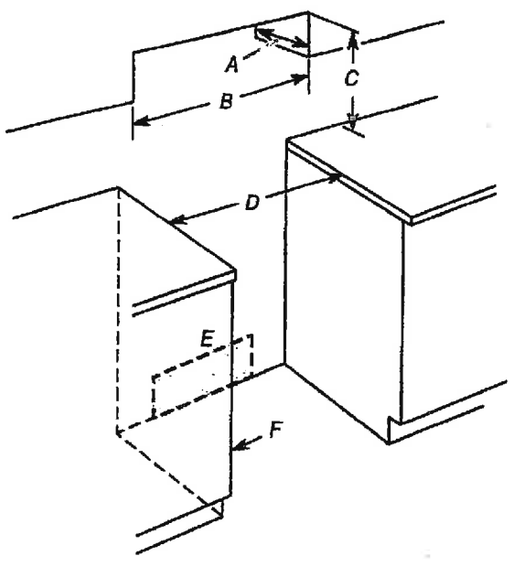

A. 13" (33.0 cm) max. upper cabinet depth
B. 30" (76.2 cm) min. opening width
*C. For minimum clearance to top of cooktop, see NOTE**
D. 31" (78.7 cm) min. opening width
E. Outlet - 8" (20.3 cm) to 22" (55.9 cm) from either cabinet, 7" (17.8 cm) max. from floor.
F. Cabinet door or hinges should not extend into the cutout.

***NOTE:** 24" (61.0 cm) minimum when bottom of wood or metal cabinet is covered by not less than ¼" (0.64 cm) flame retardant millboard covered with not less than No. 28 MSG sheet steel, 0.015" (0.4 mm) stainless steel, 0.024" (0.6 mm) aluminum or 0.020" (0.5 mm) copper.

30" (76.2 cm) minimum clearance between the top of the cooking platform and the bottom of an uncovered wood or metal cabinet.

Electrical Requirements - Canada Only

⚠WARNING

Electrical Shock Hazard

Electrically ground range.

Failure to do so can result in death, fire, or electrical shock.

If codes permit and a separate ground wire is used, it is recommended that a qualified electrical installer determine that the ground path is adequate and wire gauge are in accordance with local codes.

Be sure that the electrical connection and wire size are adequate and in conformance with CSA Standard C22.1, Canadian Electrical Code, Part 1 - latest edition, and all local codes and ordinances.

A copy of the above code standards can be obtained from:

Canadian Standards Association
178 Rexdale Blvd.
Toronto, ON M9W 1R3 CANADA

- Check with a qualified electrical installer if you are not sure the range is properly grounded.

Range Rating*		Specified Rating of Power Supply Cord Kit and Circuit Protection
120/240 Volts	**120/208 Volts**	**Amps**
8.8 - 16.5 KW	7.8 - 12.5 KW	40 or 50**
16.6 - 22.5 KW	12.6 - 18.5 KW	50

*The NEC calculated load is less than the total connected load listed on the model/serial/rating plate.

**If connecting to a 50-amp circuit, use a 50-amp rated cord with kit. For 50-amp rated cord kits, use kits that specify use with a nominal 1⅜" (34.9 mm) diameter connection opening.

- A time-delay fuse or circuit breaker is recommended.
- This range is equipped with a CSA International Certified Power Cord intended to be plugged into a standard 14-50R wall receptacle. Be sure the wall receptacle is within reach of range's final location.

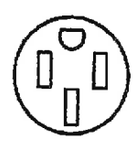

- Do not use an extension cord.

INSTALLATION INSTRUCTIONS

Unpack Range

⚠WARNING

Excessive Weight Hazard

Use two or more people to move and install range.

Failure to do so can result in back or other injury.

1. Remove shipping materials, tape and film from range.
2. Remove oven racks and parts package from inside oven.
3. Do not remove the shipping base at this time.

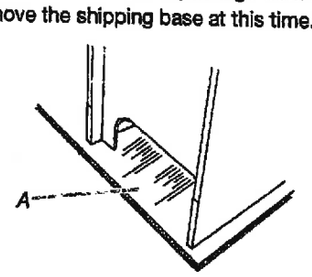

A. Shipping base

Amana

ANGUS SOUTH
LOT 151-8

Top-Loading Automatic Washer

PRODUCT MODEL NUMBERS

NTW4501X, NTW4601X, NTW4600Y, NTW4610Y, NTW4630Y, NTW4650Y, NTW4700Y, NTW4750Y, NTW4601B, NTW4611B, NTW4631B, NTW4651B, NTW4701B, NTW4605E, NTW4635E, NTW4655E, NTW4705E, NTW4755E, NTW4516F

Washer dimensions

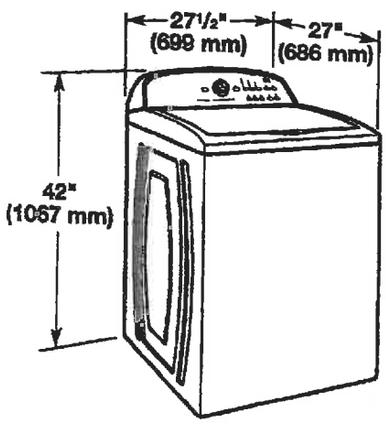

Recessed area or closet installation

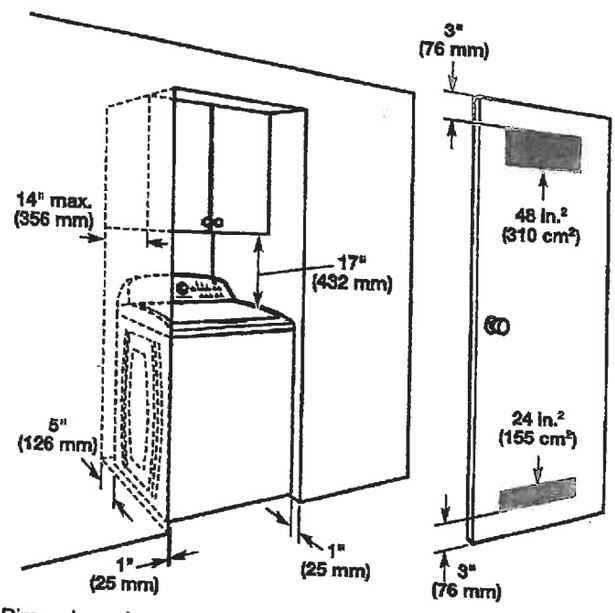

Dimensions show recommended spacing allowed, except for closet door ventilation openings which are minimum required. This washer has been tested for installation with spacing of 0" (0 mm) clearance on the sides. Consider allowing more space for ease of installation and servicing, and spacing for companion appliances and clearances for walls, doors, and floor moldings. Add spacing of 1" (25 mm) on all sides of washer to reduce noise transfer. If a closet door or louvered door is installed, top and bottom air openings in door are required.

W10240509D
05/2016

ELECTRICAL REQUIREMENTS

LOT 151-8 ANGUS SOUTH

A 120 volt, 60 Hz., AC only, 15- or 20-amp, fused electrical supply is required. A time-delay fuse or circuit breaker is recommended. It is recommended that a separate circuit serving only this appliance be provided.

DRAIN SYSTEM

Drain system can be installed using a floor drain, wall standpipe, floor standpipe, or laundry tub. Select method you need.

Floor standpipe drain system

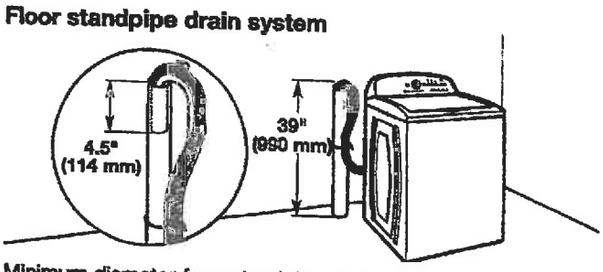

Minimum diameter for a standpipe drain: 2" (51 mm). Minimum carry-away capacity: 17 gal. (64 L) per minute. Top of standpipe must be at least 39" (990 mm) high; install no higher than 96" (2.44 m) from bottom of washer. If you must install higher than 96" (2.44 m), you will need a sump pump system.

Wall standpipe drain system

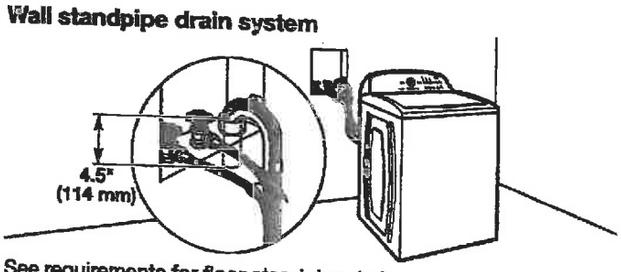

See requirements for floor standpipe drain system.

Floor drain system

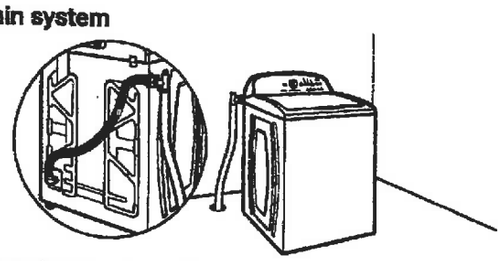

Floor drain system requires a Siphon Break Kit (Part Number 285834), 2 Connector Kits (Part Number 285835), and an Extension Drain Hose (Part Number 285863) that may be purchased separately. To order, please see toll-free phone numbers in your Use and Care Guide. Minimum siphon break: 28" (710 mm) from bottom of washer. (Additional hoses may be needed.)

Laundry tub drain system

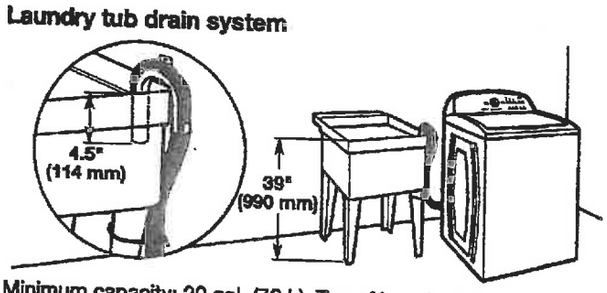

Minimum capacity: 20 gal. (76 L). Top of laundry tub must be at least 39" (990 mm) above floor; install no higher than 96" (2.44 m) from bottom of washer.

IMPORTANT: To avoid siphoning, no more than 4.5" (114 mm) of drain hose should be inside standpipe or below the top of wash tub. Secure drain hose with cable tie.

Because Whirlpool Corporation policy includes a continuous commitment to improve our products, we reserve the right to change materials and specifications without notice.

Dimensions are for planning purposes only. For complete details, see Installation Instructions packed with product. Specifications subject to change without notice.

Whirlpool® Undercounter Dishwasher

ANGUS SOUTH
LOT 151-8

PRODUCT MODEL NUMBERS

WDF110PAB	WDF310PLA	WDF530PSY
WDF111PAB	WDF320PAD	WDF540PAD
WDF120PAF	WDF510PAY	WDF730PAY
WDF121PAF	WDF520PAD	WDT710PAY
WDF310PAA	WDF530PAY	WDT720PAD
WDF310PCA	WDF530PLY	WDT770PAY

Electrical Requirements: 120-volt, 60-Hz, AC only, 15- or 20-amp. fused electrical supply. Copper wire only. A time delay fuse or circuit breaker and separate circuit is recommended.

If direct wiring dishwasher: Use flexible, armored, or nonmetallic, sheathed copper wire with grounding wire that meets the wiring requirements for your home and local codes and ordinances. Use a UL listed or CSA approved conduit connector.

If connecting dishwasher with a power supply cord: Use Power Supply Cord Kit (Part No. 4317824) marked for use with dishwashers. Follow the kit instructions for installing the power supply cord.

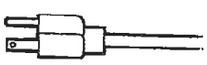

Power supply cord must plug into a grounded 3 prong, outlet, located in the cabinet next to the dishwasher opening. Outlet must meet all local codes and ordinances.

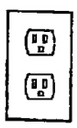

Water Supply Requirements: A hot water line with 20 to 120 psi (138 to 862 kPa) water pressure. Water temperature must be 120°F (49°C) water at dishwasher. Use ⅜" O.D. copper tubing with compression fitting or flexible braided water supply line (½" minimum plastic tubing is not recommended). Use a 90° elbow with ¾" N.P.T. external pipe threads on one end. Do not solder within 6" (15.2 cm) from water inlet valve.

Drain Requirements: A new drain hose is supplied with your dishwasher. If this is not long enough, use a new drain hose with a maximum length of 12' (3.7 m) (Part No. 3385556) that meets all current AHAM/IAPMO test standards, is resistant to heat and detergent, and fits the 1" (2.5 cm) drain connector of the dishwasher.

Make sure to connect the drain hose to waste tee or disposer inlet above drain trap in house plumbing and 20" (50.8 cm) minimum above the floor. It is recommended that the drain hose either be looped up and securely fastened to the underside of the counter or be connected to an air gap.

Make sure to use an air gap if the drain hose is connected to house plumbing lower than 20" (50.8 cm) above subfloor or floor.

Use ½" (1.3 cm) minimum I.D. drain line fittings.

If required, the air gap should be installed in accordance with the air gap installation instructions. When connecting the air gap, a rubber hose (not provided) will be needed to connect to the waste tee or disposer inlet.

PRODUCT DIMENSIONS

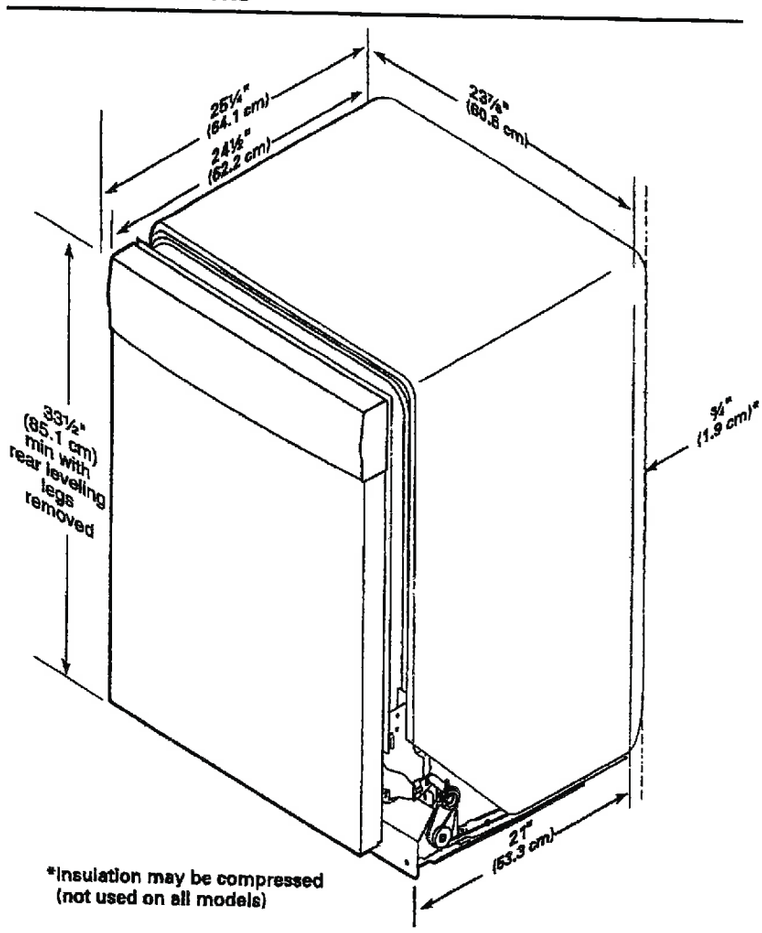

*Insulation may be compressed (not used on all models)

Because Whirlpool Corporation policy includes a continuous commitment to improve our products, we reserve the right to change materials and specifications without notice.

Dimensions are for planning purposes only. For complete details, see installation instructions packed with product. Specifications subject to change without notice.

W10435040C-D-WH
5/1/16

CABINET CUTOUT DIMENSIONS

LOT 151-8 ANGUS SOUTH

NOTE: Shaded areas of cabinet walls show where utility connections may be installed.

*Measure from the lowest point on the underside of the countertop. May be reduced to 33½" (85.1 cm) by removing the rear leveling legs from dishwasher.

**Minimum, measured from narrowest point of opening.

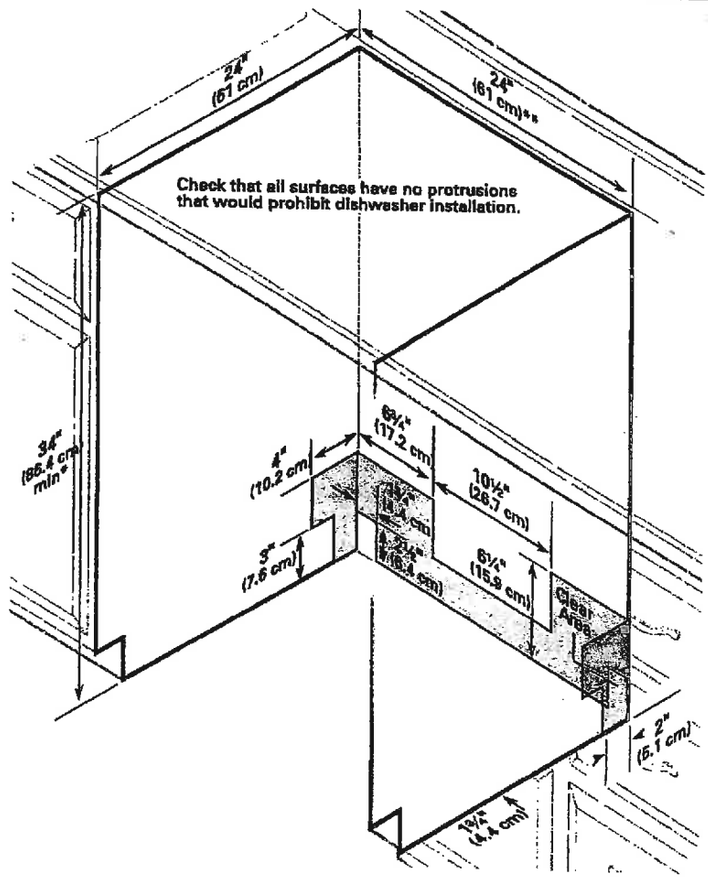

Because Whirlpool Corporation policy includes a continuous commitment to improve our products, we reserve the right to change materials and specifications without notice.

Dimensions are for planning purposes only. For complete details, see Installation Instructions packed with product. Specifications subject to change without notice.

W10435040C-D-WH
5/1/16